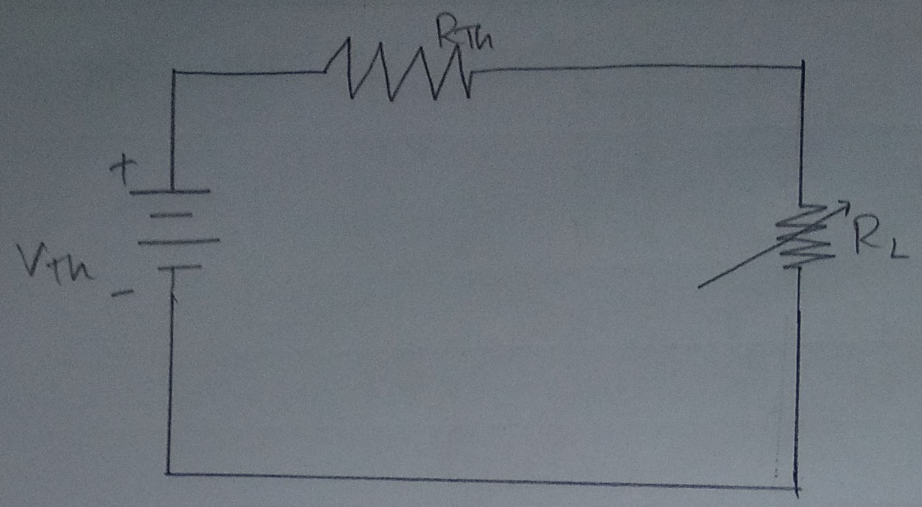

Circuit diagram for maximum power transfer theorem:

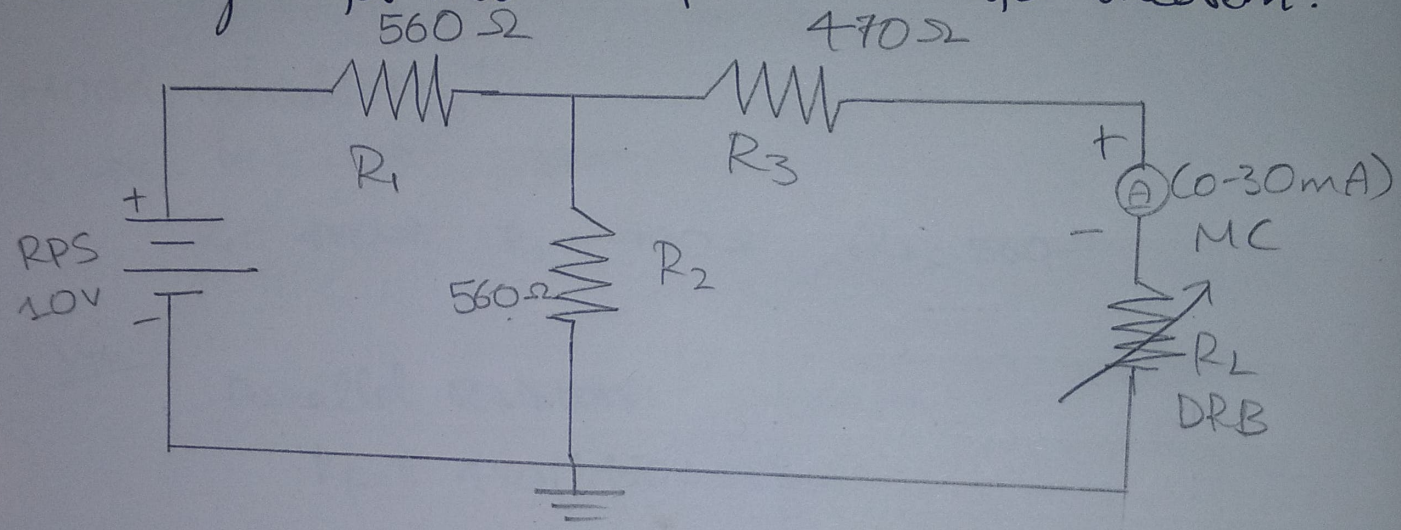

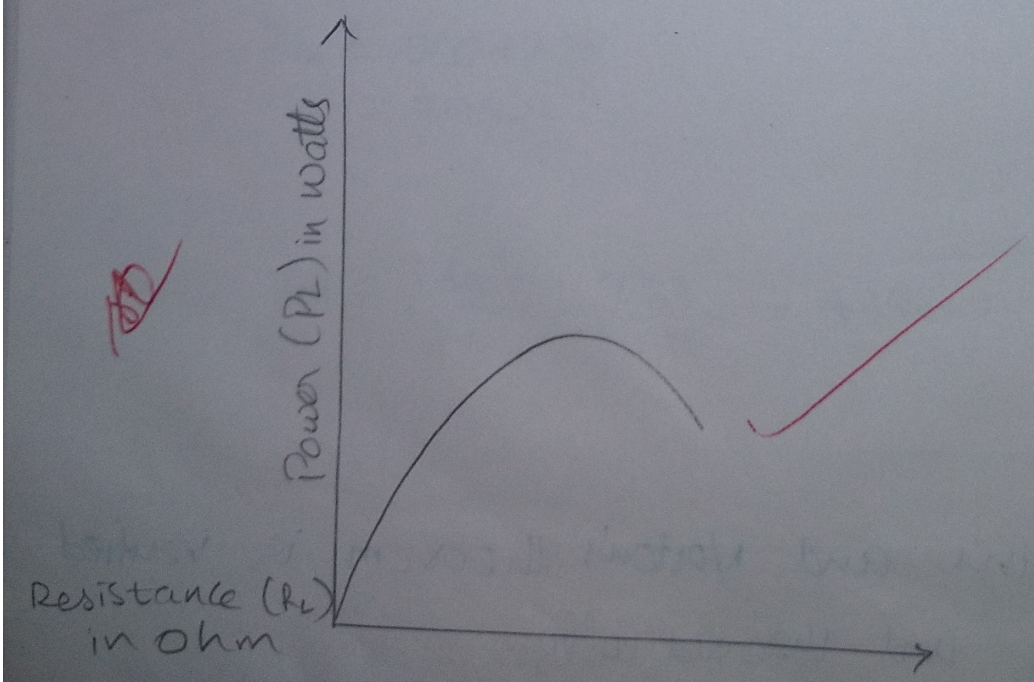

EXP.NO.: 6
DATE: 11/2/26

VERIFICATION OF MAXIMUM POWER TRANSFER THEOREM

AIM:
To measure the power absorbed in a load and to verify that the power absorbed in a load is maximum only when load resistance is equal to the source resistance.

APPARATUS REQUIRED:

S.NO	APPARATUS	RANGE/RATING	QUANTITY
1	VOLTMETER	(0-15V) MC	1
2	AMMETER	(0-500mA) MC	1
3	RESISTORS	560 Ω 470 Ω	2 1
4	RPS (DC Supply)	15 V	1

PROCEDURE:

1. Make connections as per the circuits diagram
2. Change the Registors R_L whose value close to R_{th}, measure the corresponding V_L, I_L and Calculate the power P_L and enter into the table (2).

Theoretical calculations:

S-NO	LOAD RESISTANCE(R_L) in Ω	LOAD CURRENT (I_L) in mA	LOAD VOLTAGE(V_L) in volts	LOAD POWER (P_L) in watts
1	330	9.26	3.05	0.028
2	560	7.63	4.27	0.033
3	750	6.67	5.00	0.0333
4	1000	5.71	5.71	0.032
5	1500	4.44	6.67	0.029

~~Theoretical~~ Practical calculation:

S-NO	LOAD RESISTANCE (R_L) in Ω	LOAD CURRENT (I_L) in A	LOAD VOLTAGE (V_L) in volts	LOAD POWER (P_L) in watts
1	330	9.0	2.95	0.026
2	560	7.4	4.10	0.030
3	750	6.5	4.85	0.031
4	1000	5.5	5.50	0.030
5	1500	4.2	6.30	0.026

O/P verified 24/2/26

MODEL CALCULATION:

Given : $V = 10V$, $R_{th} = 750\Omega$, $R_L = 750\Omega$

LOAD CURRENTE: $I_L = \frac{10}{750+750} = 0.00667A$

LOAD VOLTAGE: $V_L = I_L \times R_L = 0.00667 \times 750$
$= 5V$

LOAD POWER: $P_L = I_L^2 \times R_L$
$= (0.00667)^2 \times 750$
$= 0.003\ W$

3. Plot a graph between R_L and P_L and find the R_L corresponding to maximum power transfer

4. Verify the measured values of R_L at maximum power transfer as same as calculated and found graphically.

MARKS SPLIT-UP:

SI.NO	DESCRIPTION	MARKS ALLOTED	MARKS OBTAINED
1	Experimental Setup/Connections	20	20
2	Observation/Readings	20	20
3	Calculations/Results	20	20
4	Viva	20	20
5	Record	20	20
		Total	100

10

20/25/20

RESULT:

Thus maximum power transfer theorem is verified practically and theoretically.